MODEL 730 FULL STREAM ELEMENTAL ANALYZER

Description

The Model 730 Full Stream Elemental Analyzer (FSEA) is a combination of the Model 410M Dual-Gamma Analyzer (DGA) and the Model 800 Neutron Activation Analyzer (NAA) which measures multiple material quality parameters as the material is processed on a conveyor belt. The FSEA continuously analyzes the entire material stream in real-time as it moves through the analysis zone, without sampling or preparation of any kind. Energy Technologies Inc. holds three patents: U.S. Patent # 7,006,919B2, 7,253,414B2, and 8,656,846.

Applications

Measurement parameters provided by the FSEA will depend on the application. Industries, where our FSEAs are currently being utilized, include but are not limited to, coal, cement, municipal solid waste (MSW), and rare earth elemental extraction (REE).

Application	**Model #**	**Measured Parameters**
Coal	730-CO	Ash, Moisture, Heating Value, Weight, Sulfur, Nitrogen, Carbon, Chlorine, Arsenic, Al_2O_3, CaO, Fe_2O_3, K_2O, MgO, MnO_2, Na_2O, SiO_2, SO_3, TiO_2
Cement	730-CE	All coal parameters, C_3S, C_2S, C_3A, C_4AF, Alumina Ratio, Silica Ratio, Loss on Ignition, Lime Saturation Factor
MSW	730-MSW	All coal parameters, Hydrogen, Oxygen
REE	730-REE	All coal parameters, Total REE (In-development parameters: Scandium, Gallium, Germanium, Yttrium, Molybdenum, Lanthanum, Cerium, Praseodymium, Neodymium, Samarium, Europium, Gadolinium, Terbium, Dysprosium, Holmium, Erbium, Thulium, Ytterbium, Lutetium, Light REE, Heavy REE)

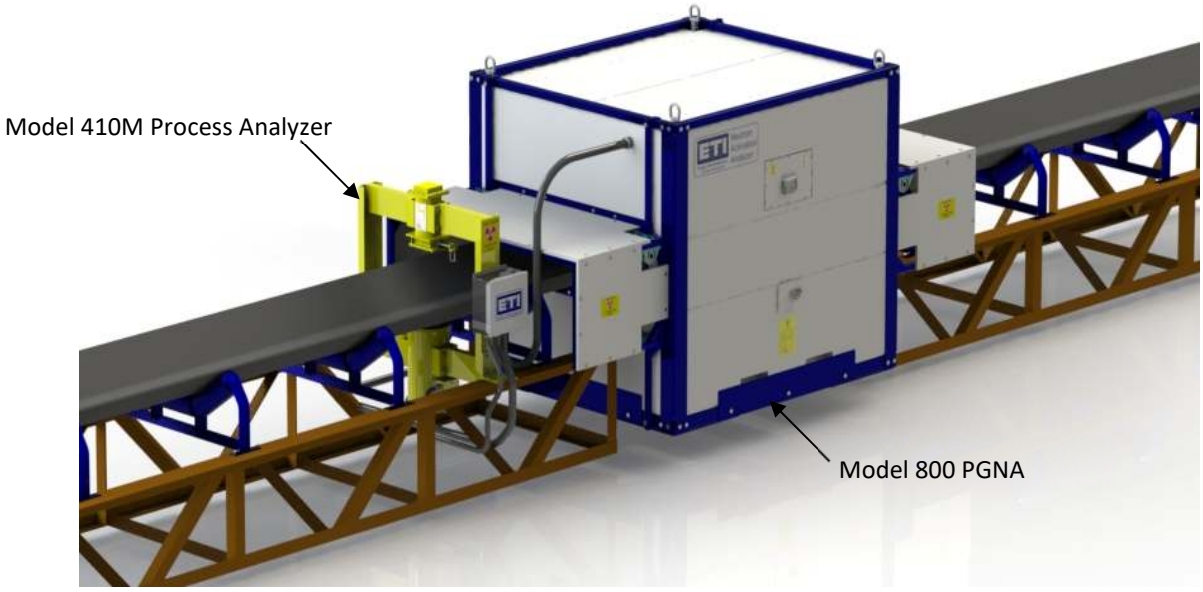

1741 Triangle Park Dr. | Maryville, Tennessee | 37801 | (865) 927-9330

MODEL 730 FULL STREAM ELEMENTAL ANALYZER

Components

DGA Belt-mounted Unit (BMU)

The DGA BMU is a fixed nuclear gauging device which utilizes sealed radioactive sources to measure the material's total ash content, moisture, heating value, and density/weight.

- The source holder, containing two to six energy sources depending on the application, is mounted above the conveyor belt and collimates a conical fan radiation beam down through the material.
- An energy-sensitive, temperature-controlled detector is mounted below the conveyor belt in the beam path.
- A junction box is mounted on or near the BMU for ease of installation and maintenance.

PGNA Belt-mounted Unit (BMU)

The PGNA BMU is a fixed nuclear gauging device which utilizes sealed radioactive sources to measure the elemental composition of a material.

- The source holder, containing two to six energy sources depending on the application, is located below the conveyor belt and collimates a conical fan radiation beam up through the material.
- Multiple energy-sensitive, temperature-controlled detectors are mounted above the conveyor belt in the beam path.

Control Room

The Control Room is an 8’x8’x20’ international shipping container which houses the Data Acquisition Unit, Network Cabinet (customer networking equipment), and Calibration Standards containers.

Data Acquisition Unit (DAU)

The DAU is a NEMA 4 electronics enclosure with state-of-the-art equipment for collecting and processing the signals from the BMUs. The DAU consists of:

- Uninterruptable Power Supply (UPS)
- Monitor
- Computer (Windows 10/11 Professional, 64-bit), 16GB RAM, 128GB SSD
- Network Switch
- Web-Enabled Power Relay
- Input/Output Control Modules
    - 4 Digital Inputs/4 Digital Outputs/4 Digital Counters
    - 8 Analog Outputs
    - 12 Thermocouple Inputs

Tachometer

The tachometer is an optional device wired back into the input/output control modules. The tachometer provides belt moving, stopped, or speed information so analysis does not continue (weight accumulated) when the conveyor belt is stopped.

Operation

The FSEA measurement principle combines gamma-ray attenuation with neutron activation to provide full compositional analysis of a material on a conveyor belt.

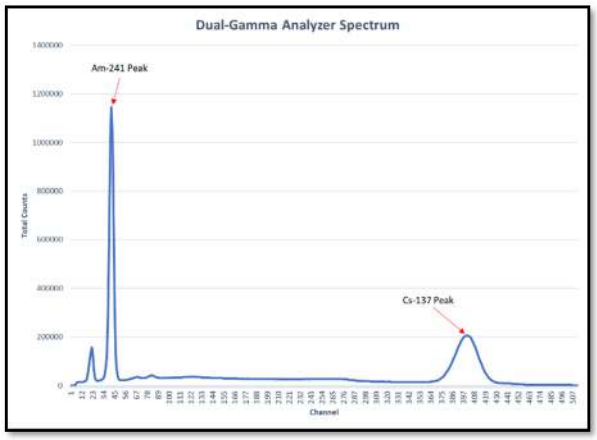

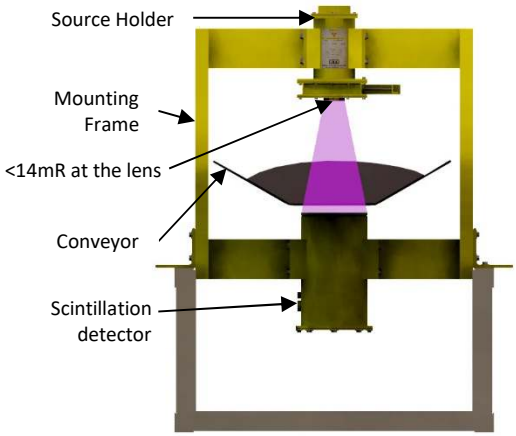

The DGA measurement principle is based on the different attenuation characteristics of gamma particles as a function of energy. This difference depends on the atomic number of the measured material such that the gauge response can be interpreted as a change in the ratio of groups of elements having different average atomic numbers.

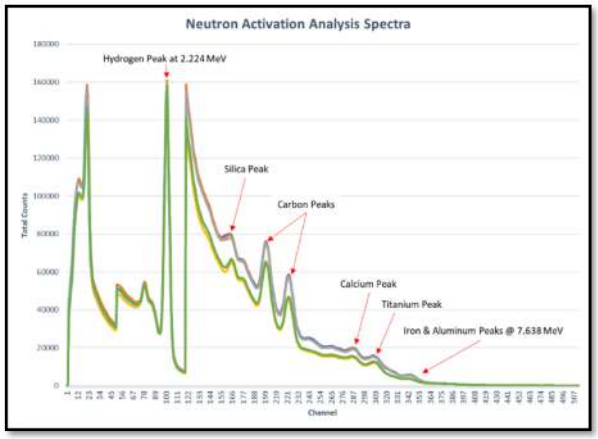

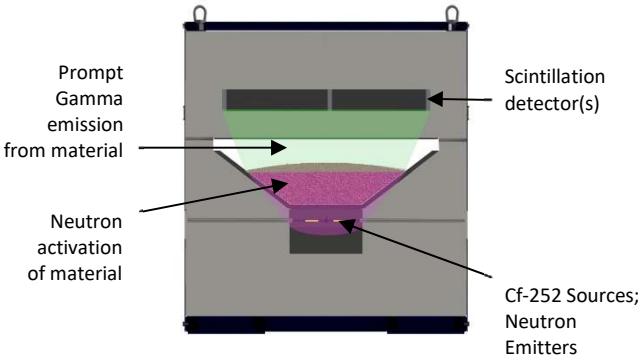

The NAA measurement principle is based on spectral shape due to gamma-ray production by neutron activation. The radiation source utilized by the PGNAA (Cf-252) emits neutrons which are absorbed by the material being analyzed and converted to gamma rays whose signals are collected by the detectors to produce an energy spectrum. The energy spectrum is then analyzed to provide elemental compositions for the measured material.

Installation and Commissioning Timeline

The production, installation, and commissioning of the Model 730 FSEA generally takes approximately three months. This timeline begins after the receipt of the purchase order and includes the following:

- Application for Radioactive Material License
- Site-specific drawing package based on measurements acquired during a site visit
    - Equipment locations
    - Control Room concrete pad details
    - Electrical/Communication requirements
- Collect & ship site-specific standards to ETI
- Concrete pads formed and poured
- Manufacturing of
    - BMUs
    - DAU
- Factory Acceptance Test & Report
- Shipment of FSEA equipment to the site
- Radioactive material license issued
- Radioactive material license to site
- Site Construction
    - Control room set
    - Structural steel mods & support table set
    - FSEA set & conveyor belt back in operation
    - Interconnecting conduit & wiring run
    - Power conduit & wiring run
- Start-up
    - Terminate all wiring
    - Install radioactive material
    - Functional testing
- Calibration, Site Acceptance Test, and Report
- Training

Cement:

The FSEA is typically used in cement plants to analyze crushed rock coming out of the quarry crusher and raw mix being fed into the raw mill.

An FSEA installed in quarry operations assists in building consistent stockpiles. The FSEA is installed after the quarry crusher to determine the composition of excavated material. Quarry managers can then pull material from different sections of the quarry based on the analyzer results, giving better control over the composition of the stockpile.

Model 730 FSEA at Buzzi Unicem, Bennett Lake Quarry - Marion County, Tennessee

When used before the raw mill, the phase composition proportions (C_3S, C_2S, & C_3A), and the clinker compositional parameters of Lime Saturation Factor (LSF), Silica Ratio (SR), and Alumina Ratio (AR) are calculated and reported. Supplemental materials needed to achieve proper phase composition and final cement characteristics can be added from homogenizing silos in more precise amounts before the kiln, ensuring uniform clinker quality and reducing kiln damage.

Critical elements such as magnesium, sulfur, sodium, phosphorous, potassium, etc., can be closely monitored to produce the desired final cement product.

FSEA in Cement Plants

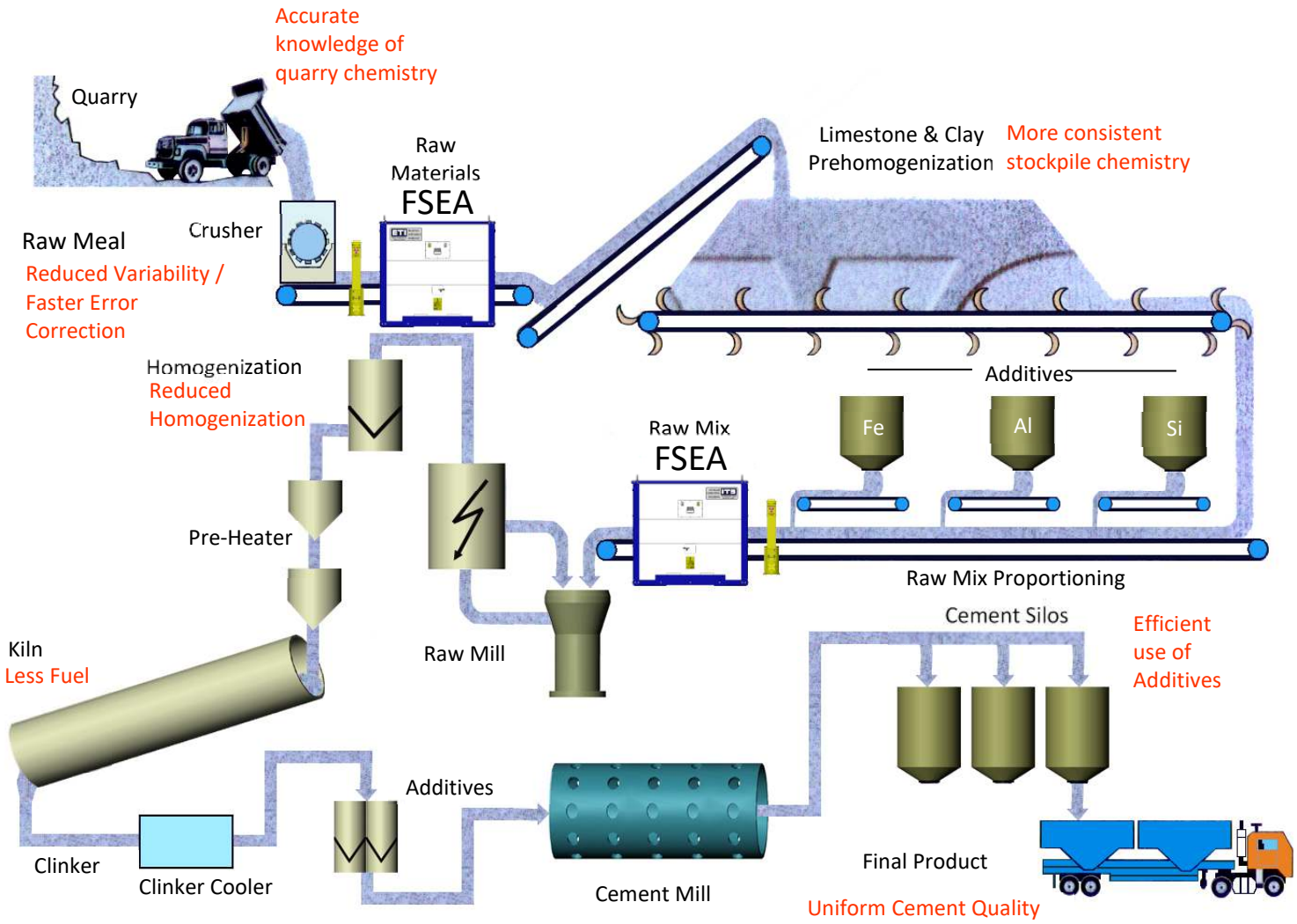

Coal:

FSEAs are utilized in power plants, mines, and loadouts (train, barge, etc.) to provide invaluable data to operators. In both power plants and mines, the FSEA is used to monitor customer-specific coal qualities such as ash, heating value, sulfur, Na_2O, Base-to-Acid Ratio, etc.

Other applications include:

- Barn management
- Silo management
- Stockpile management
- Sorting
- Blending
- Slagging and fouling mitigation

Model 730 FSEAs at Duke Energy - Cliffside Steam Station, Rutherford County, North Carolina

In most situations, the coal being mined and provided to the plant or loadout cannot be modified or updated in any way. Basically, what is mine is mined. But the coal can be stored in multiple locations (silos, barns, piles, etc.) which will allow operators to choose and change which location to load trains or trucks from in order to meet a customer's requirement. This ability to choose which location to load from is achievable in real-time with the implementation of the FSEA.

FSEA in Coal-Fired Power Plants

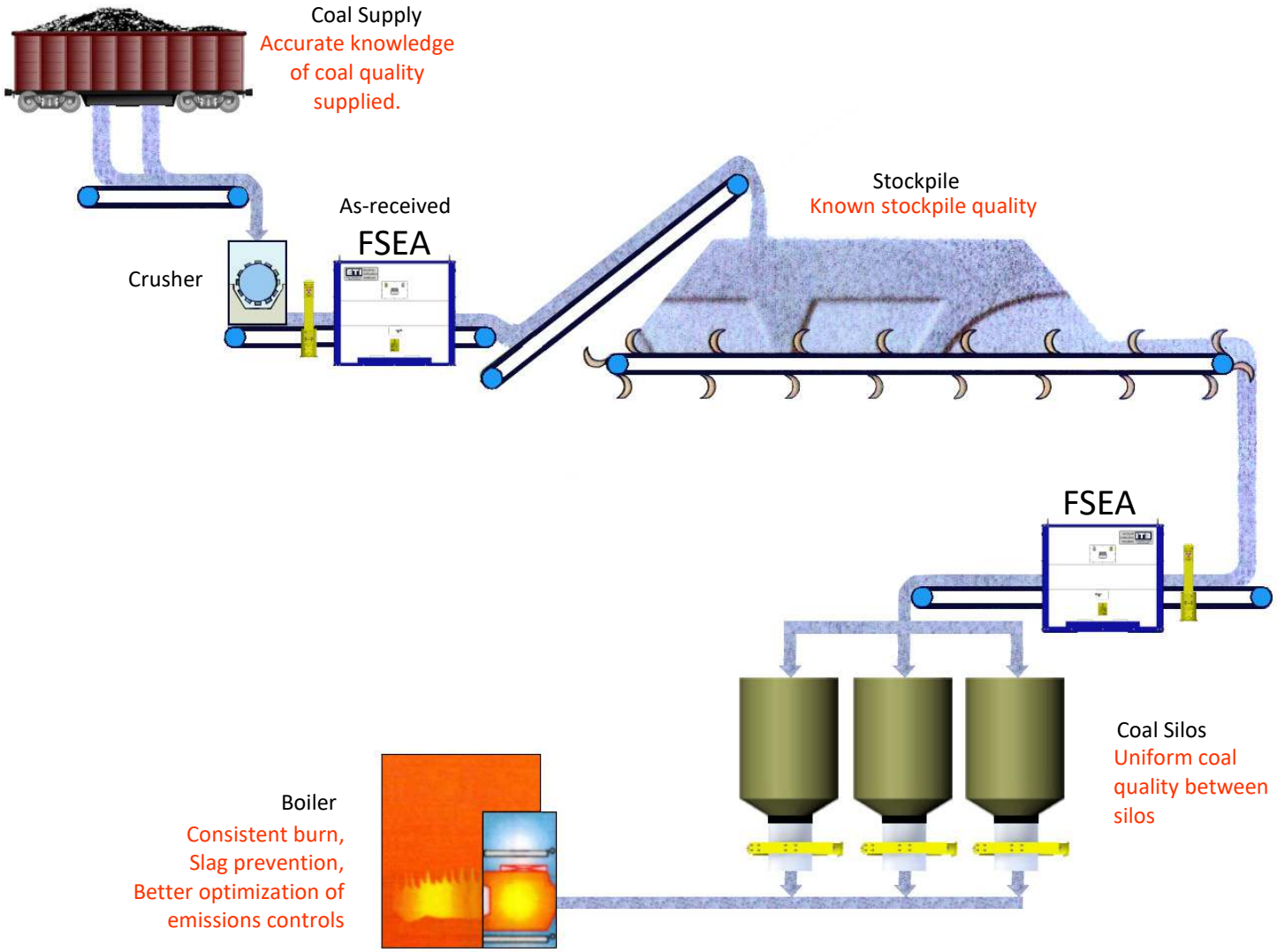

Biomass, Municipal Solid Waste, & Wood Products:

The use of the FSEA in these applications is similar to its use in coal. The analyzer reports can be supplied with batches of material to document their quality. As in coal applications, the FSEA reports heating value and ash content.

Rare Earth Elemental Identification

Rare Earth Element (REE) extraction begins with identifying coals with sufficient concentrations of REE to warrant sending the material to an extraction facility to have the REE extracted for use in multiple industries. The first point of interest for the identification process is the coal mine.

With the use of ETI's Model 730 Full Stream Element Analyzer and Model 2000 High-Speed Sort Gate at the mouth of the mine, a mining operation can identify coals with high concentrations of REE and sort them into separate piles based on the FSEA measurement results. Once the coals have been separated, the mining operation can optimize the extraction process by sending coals with higher concentrations of REE only.
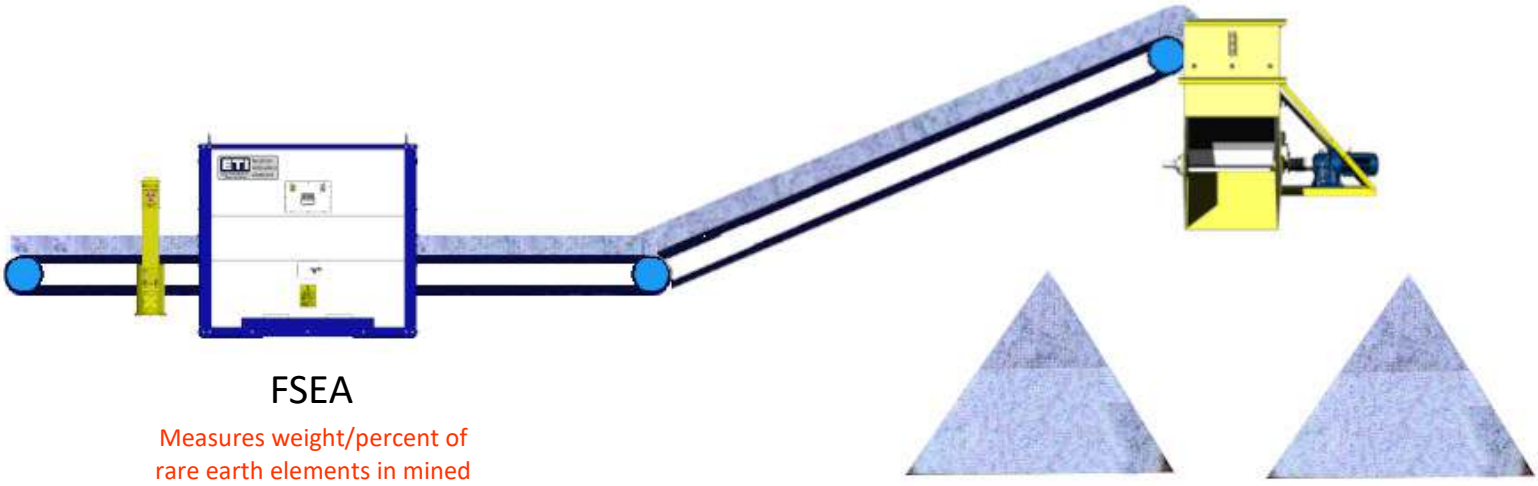
Rare Earth Element (REE) Analysis & Sorting